LED SHOEBOX LIGHT / 40W

TECHNICAL DATA SHEET

Introduction

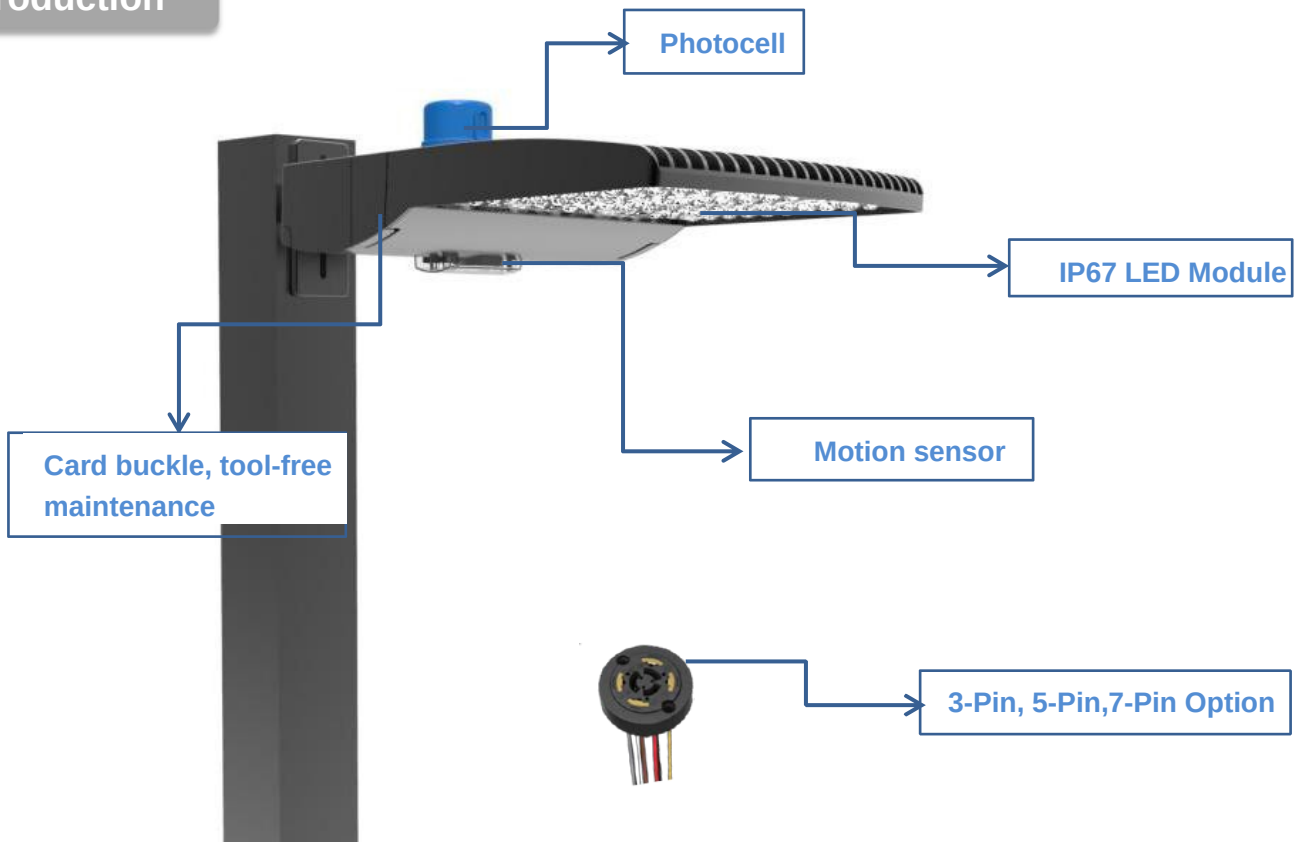

Different Installations

Arm(Square Pole)-M

Arm(Round Pole)-M

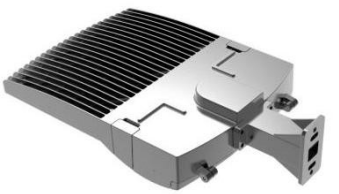

Arm(Square Pole)-L

Arm(Round Pole)-L

Arm-one-key operate

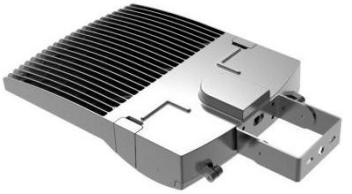

Trunnion

Slip fitter

Note：M-Medium，L-Large

LED SHOEBOX LIGHT 40W

TECHNICAL DATA SHEET

FEATURES

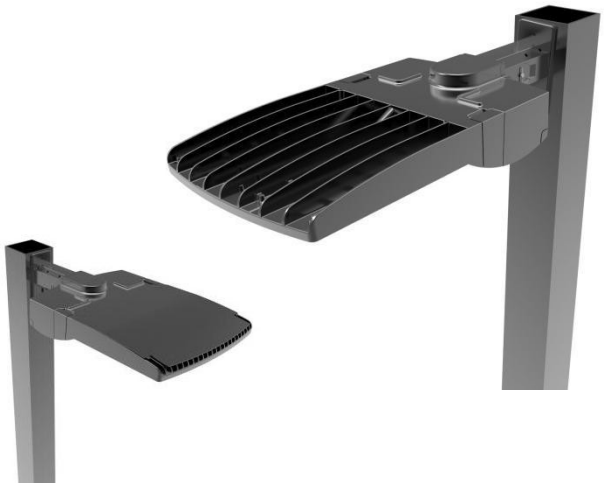

- High lumen efficacy, up to 120lm/W
- Modularized design, easy for local assembly
- Slim appearance, low wind resistance
- One person installation
- Good ID design to achieve self-clean
- Cover for debris buildup option

SPECIFICATIONS	
Model	EAG-SBP-40W
Power Consumption	**40W**
Input Voltage	120-277VAC
Power Factor	>0.90
Lumen Efficiency	120lm/W
Lumen	4800lm
LED Brand	Lumileds 3030/Osram 3030
CCT	3000K/4000K/5000K
CRI	75
Optics	Type2/Type3
Finish	Dark Bronze/White/Grey
Dimmable	Dim
Lifespan	50,000hrs
Operating Temperature	-20~40℃
Driver Brand	Inventronics

DIMENSION

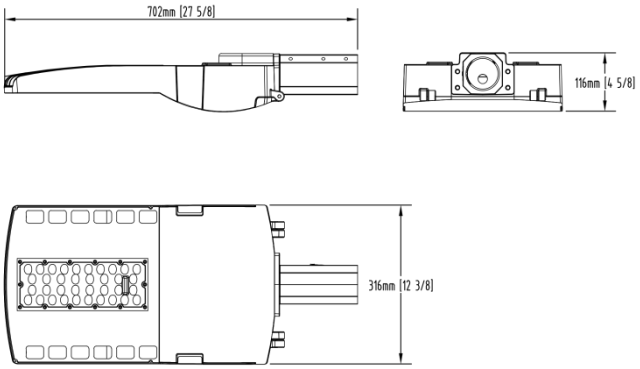

DISTRIBUTION CURVE

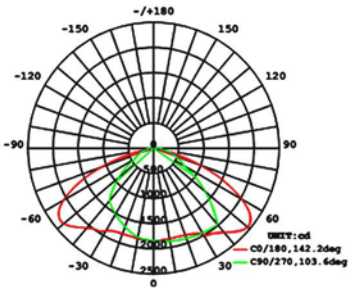

Type 2

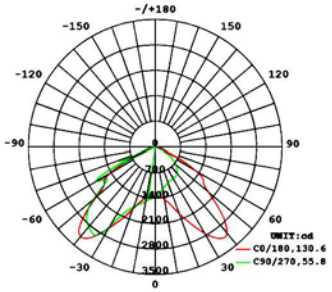

Type 3